ANVIZ

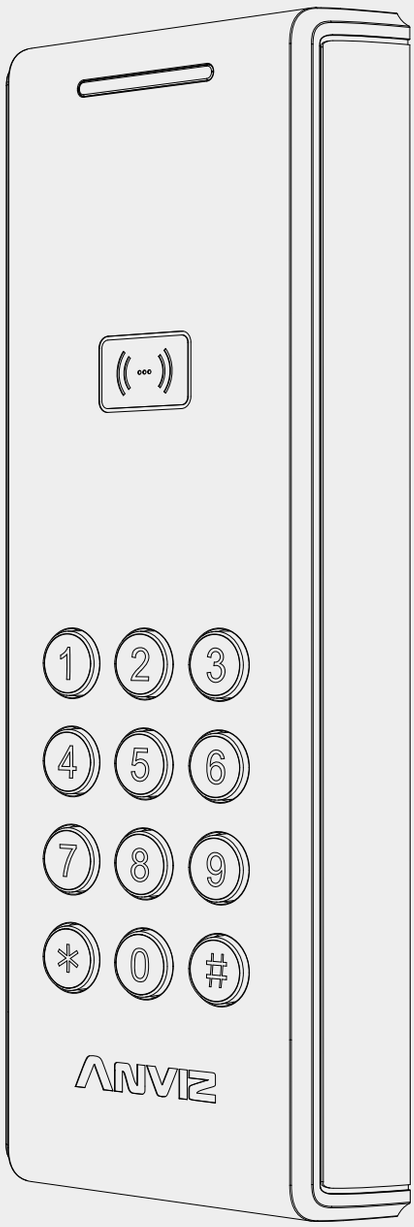

User Manual V1.0

C2 KA

Outdoor RFID Access Control Terminal

Safety Instructions

Please read this safety instructions carefully before you use the product in order to prevent injury to yourself, others and prevent property damage. The term 'product' in this manual refers to the hardware and any item provided with it.

● Do not install or repair the product arbitrarily. This may result in electric shock, fire or product damage.

● Damages caused by any modifications or unfollow installation instructions can void the manufacturer's Warranty.

● Do not install the product in places with direct sunlight, dust, soot, or gas leak. This may result in electric shock or fire.

● The optimal working environment of C2 KA is both indoor and outdoor. The device fully operates under temperatures -10°C~50°C (14°F~122°F), and humidity 20-90%.

● Do not use damaged power supply adaptors, plugs, or loose electrical sockets. Unsecured connections may cause electric shock or fire. The recommended power supply to C2 KA terminal is DC 12V ~ 2A.

● Do not drop or cause impacts to the product. The product may malfunction.

● When cleaning the product, wipe it with a clean and dry towel (cloth or cotton).

● If you need to sanitize the product, moisten the cloth or the wipe with a proper amount of rubbing alcohol and gently clean all exposed surfaces including fingerprint sensor. Use rubbing alcohol (containing 70% Isopropyl alcohol) and a clean, non-abrasive cloth like lens wipe.

● Do not apply liquid directly to the surface of the product.

● Do not use the product for anything else than its intended use.

Introduction

Pack List

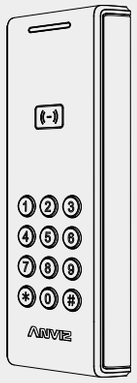

1 * Terminal

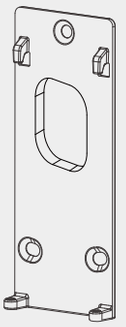

1 * Back Mounting Plate

3 * Screws A

2 * Screws B

1 * RJ45 Network Port

2 * RFID Cards

Appearance Description

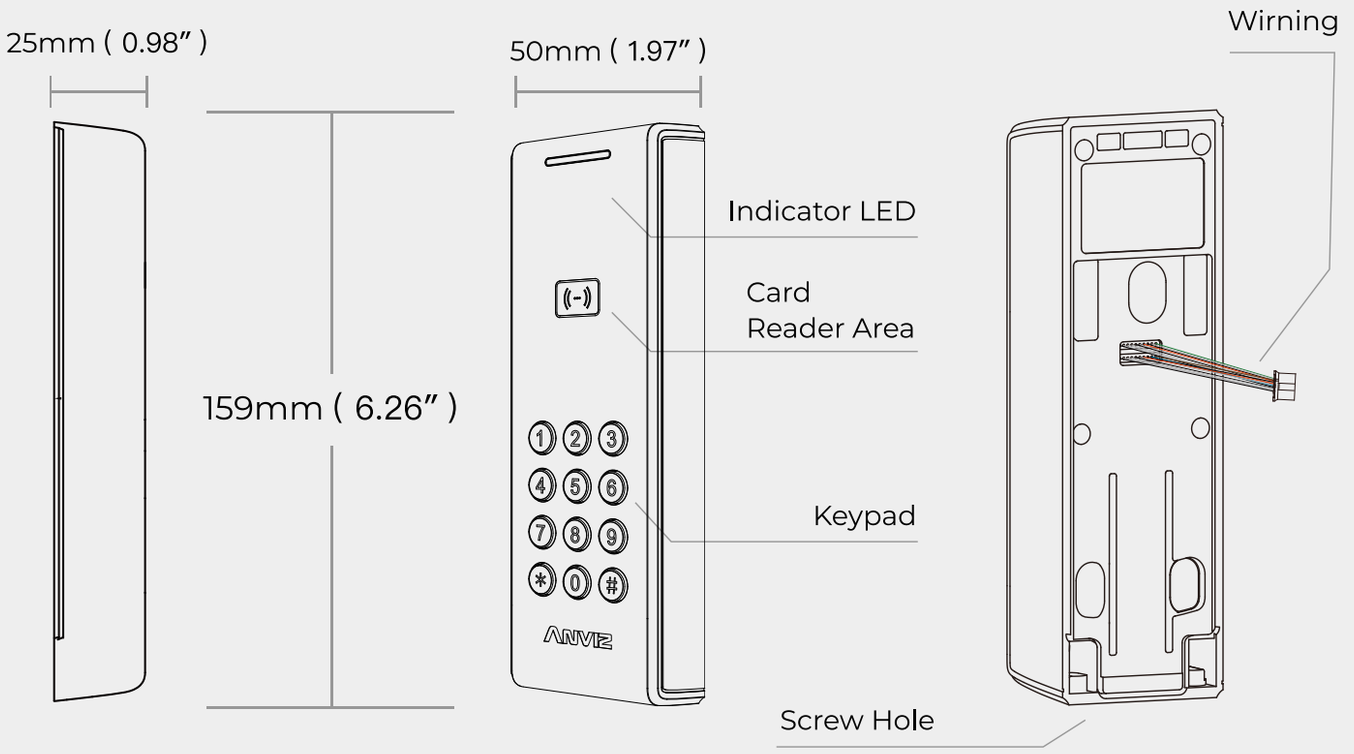

Installation

Step 1:

Keep the Back-Mounting Plate perpendicular to the ground. We Suggest at the height of 1.2m (47.24”) from the floor.

Drill 3 screw A holes on the wall according to the Back-Mounting Plate.

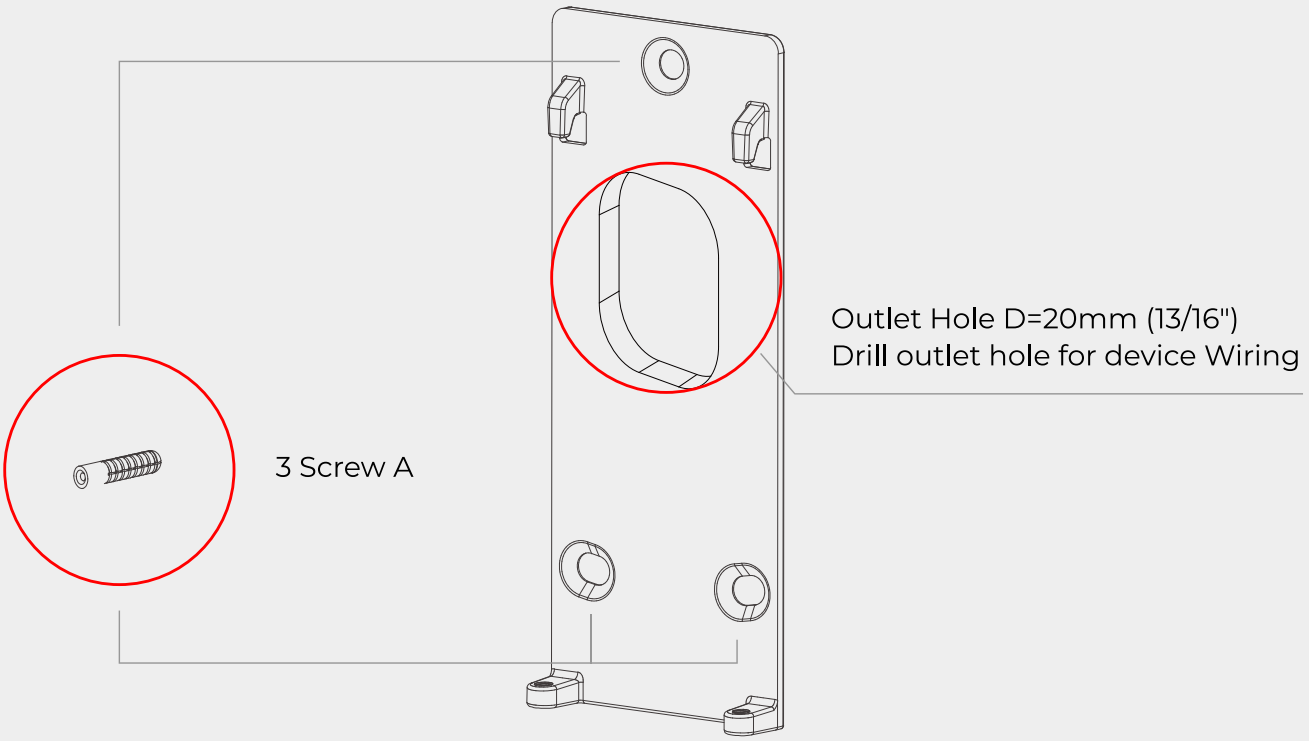

Step 2:

Please punch out the wiring from the outlet hole before installing the mounting bracket and use the screws to fix the mounting bracket on the wall. Use the screwdriver to tighten the screws, follow the direction indicated below to complete the installation.

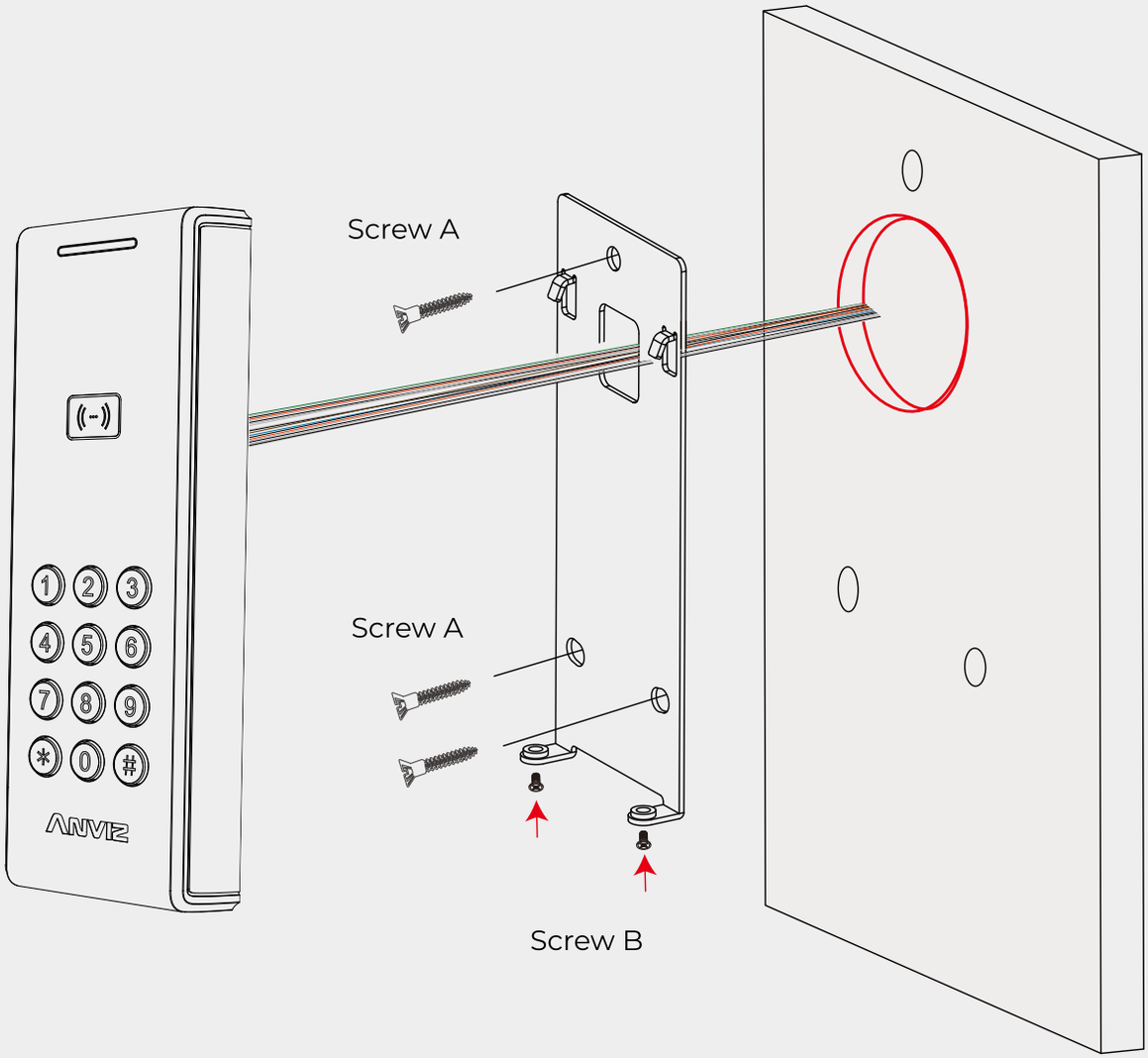

PLEASE INDICATE THE SCREW DIRECTION

Wiring Connection

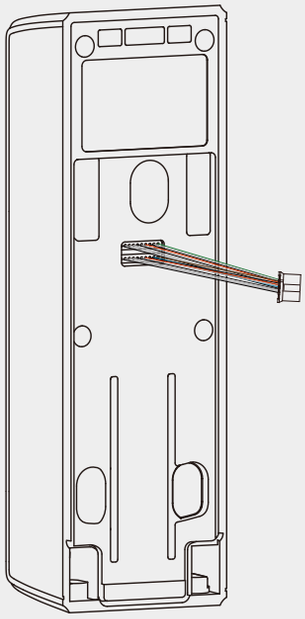

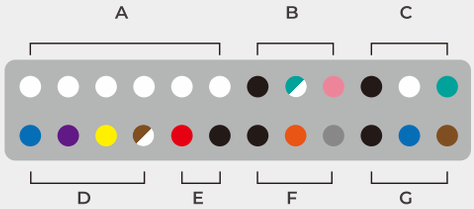

A. RJ45 Network Socket

Name	Color
Network (6Pins)	White

B. Wiegand Input

Name	Color
GND	Black (BK)
Wiegand 1 (WI1)	Green&White (GW)
Wiegand 0 (WI0)	Pink (PK)

C. Wiegand Output

Name	Color
NC	Blue (BU)
COM	Purple (PL)
NO	Yellow (YE)
12V Output	Brown&White (BW)

E. Power Supply

Name	Color
PWR +12V (12V IN)	Red (RD)
PWR GND	Black (BK)

F. Input

Name	Color
GND	Black(BK)
Door Switch (D/S)	Orange (OG)
Door Monitor (D/M)	Gray (GY)

G. RS-485

Name	Color
GND	Black (BK)
Wiegand 1 (W01)	White (WT)
Wiegand 0 (W00)	Green (GN)

Name	Color
GND	Black (BK)
485A	Light Blue (LB)
485B	Brown (BN)

Wiring with Access Control Power Supply

Access Control Power Supply

Input 110V~240V

Output DC 12V 3A

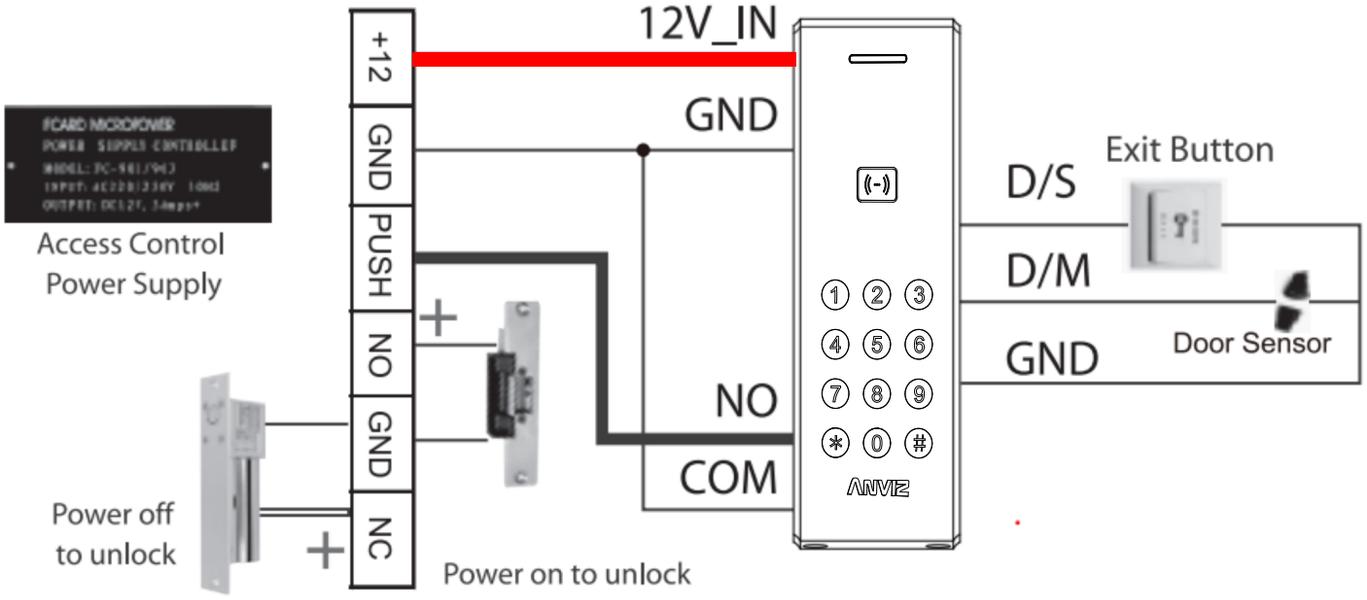

WIRING WITH ACCESS CONTROL UNIT – SC011

SC011 and the C2 KA devices are authorized by Anviz Wiegand to form a distributed access control system.

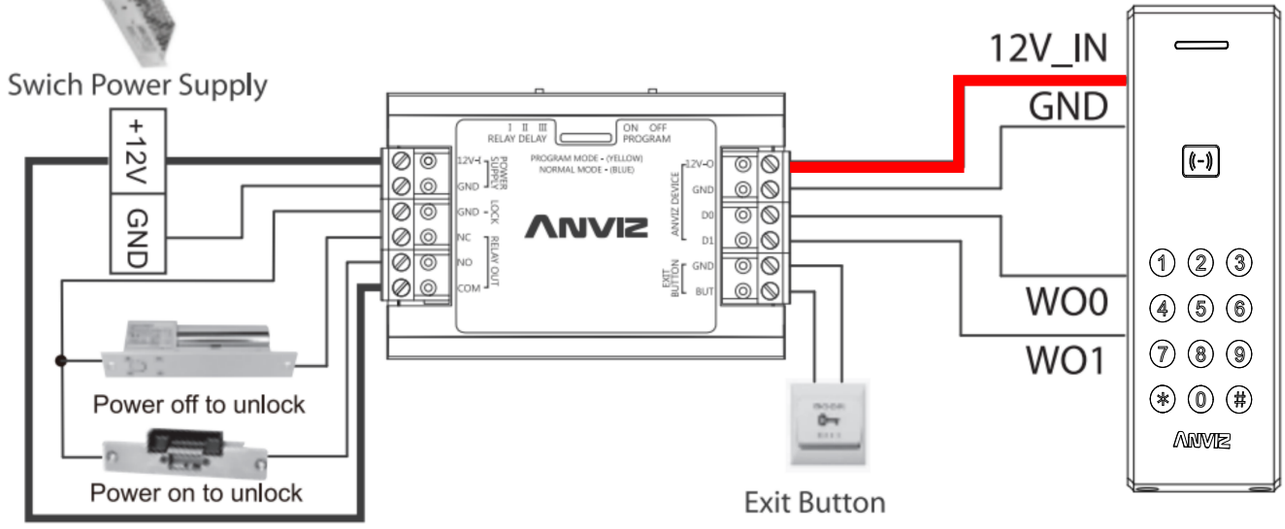

Please Configure the Wiegand Output of C2 KA to Anviz Wiegand option, (Refer to Access Settings) and use the SC011 Quick Guide to configure the Wiegand communication correctly.

Please contact Support@anviz.com for more information.

Device Operation

Enter to Main Menu Status

Power On the terminal and wait until the C2 KA flashes a blue breathing light (Normal Operation Status)

Enter Terminal Main Menu

Press '*' or '#' key on the terminal.	Terminal will display a white LED light.
Enter default admin account: '0' and press '#' key.	White LED light will still on standby, waiting for the admin password.

Enter default admin password: '12345' and press '#' key.	Blue LED light will blink faster, informing you´re inside the Main Menu.

Insert the desired command code (check next pages for more details).	Blue LED light will still blink faster, informing you´re inside the Main Menu

Press '*' key or wait for 10 secs without any operation to exit the Main Menu Management Status.	Blue LED will blink slower, informing you´re back in the Normal Operation Status.

Notice: The default the admin account is '0' and default password is "12345".

Modify Terminal Management Password

Modify Terminal Management Password

Enter to terminal main menu	Blue LED light will blink faster, informing you´re inside the Main Menu.

Press Command Code: '0'	Terminal will display a pink LED light, informing you´re in the Terminal Settings Status.

Insert the new admin password and press '#' key.	Terminal will display a green LED light, informing setup is successful.

Insert the desired command code to continue terminal configuration.	Blue LED light will blink faster, informing you´re inside the Main Menu.

Press '*' key or wait for 10 secs without any operation to exit the Main Menu Management Status.	Blue LED will blink slower, informing you´re back in the Normal Operation Status.

Notice: The maximum length of the terminal management password is 6 digits number.

It´s also possible to modify terminal´s password by its webserver.

Register User

Follow the next steps to add a new user on the device

Register User

Enter to terminal main menu	Blue LED light will blink faster, informing you´re inside the Main Menu.

Press Command Code: '1'	Terminal will display a pink LED light, informing you´re in the Terminal Settings Status.

Input user ID and press '#' key	Pink LED light will still blink, informing you´re in the Terminal Settings Status.

Input PIN code and press '#' key	Terminal will display a green LED light, informing setup is successful.

Continue to register another User.	Terminal will display a pink LED light, informing you´re in the Terminal Settings Status.

Register a new user using RFID card: Swipe user RFID card	Terminal will display a green LED light, informing setup is successful.

Continue to register another User.	Terminal will display a pink LED light, informing you´re in the Terminal Settings Status.

Press '*' key or wait for 10 secs without any operation to exit the Main Menu Management Status.	Blue LED will blink slower, informing you´re back in the Normal Operation Status.

Notice: The maximum User ID length is 12 digits and password maximum length is 6 digits.

Whenever you register a new RFID Card directly on the terminal, the User ID will be sequency assigned, starting with the first empty value (default: 1).

It´s also possible to register new users by terminal´s webserver.

Delete User

Follow the next steps to delete an existing user on the device

Delete User

Enter to terminal main menu	Blue LED light will blink faster, informing you´re inside the Main Menu.

Press Command Code: '2'	Terminal will display a pink LED light, informing you´re in the Terminal Settings Status.
Insert the user ID you´ll delete and press '#' key.	Terminal will display a green LED light, informing setup is successful.
Continue to Delete another User.	Pink LED light will still blink, informing you´re in the Terminal Settings Status.
Delete an existing RFID card: Swipe user RFID card you´ll delete.	Terminal will display a green LED light, informing setup is successful.
Continue to Delete another User.	Pink LED light will still blink, informing you´re in the Terminal Settings Status.
Press '*' key or wait for 10 secs without any operation to exit the Main Menu Management Status.	Blue LED will blink slower, informing you´re back in the Normal Operation Status.

Notice: It´s also possible to delete existing users by terminal´s webserver.

Delete All Users

Caution: This proceed will remove all users' information from the terminal

Delete All Users

Enter to terminal main menu	Blue LED light will blink faster, informing you´re inside the Main Menu.
Press Command Code: '2'	Terminal will display a pink LED light, informing you´re in the Terminal Settings Status.
Input '0000' and press # key	Terminal will display a green LED light, informing setup is successful.
Insert the desired command code to continue terminal configuration.	Blue LED light will blink faster, informing you´re inside the Main Menu.
Press '*' key or wait for 10 secs without any operation to exit the Main Menu Management Status.	Blue LED will blink slower, informing you´re back in the Normal Operation Status.

Notice: It´s also possible to delete all users´ by terminal´s webserver.

Terminal Setup

Setup terminal verify mode:

There are three types of verification mode for the terminal:

Card or ID + Pin Code: The user can use the registered Card or insert ID + Pin Code to access the terminal.

Card Only: The user can only use a registered RFID card to access the terminal.

Card +Password: The user needs to swipe card first, then insert his/her password to access the terminal.

Door Open Verification Mode

Enter to terminal main menu	Blue LED light will blink faster, informing you´re inside the Main Menu.

↓

Press Command Code: '3'	Terminal will display a pink LED light, informing you´re in the Terminal Settings Status.

↓

Input ' 0' and press '#' key to setup Card or ID+Pin Code Verify Mode	Terminal will display a green LED light, informing setup is successful.
OR Input '1' and press '#' key to setup only Card verify mode.	
OR Input '2' and press '#' key to setup only Card + Pin Code verify mode.	

↓

Press '*' key or wait for 10 secs without any operation to exit the Main Menu Management Status.	Blue LED will blink slower, informing you´re back in the Normal Operation Status.

Notice: To use the Card + Pin Code verification mode. The user must have the RFID Card and Pin Code under the same ID number. This is only possible by configuring users on the terminal´s webserver.

Setup terminal relay delay time

The relay delay time range is 0~30 secs. The "0" means the relay output is disabled.

Setup Relay Delay Time

Enter to terminal main menu	Blue LED light will blink faster, informing you´re inside the Main Menu.
Press Command Code: '4'	Terminal will display a pink LED light, informing you´re in the Terminal Settings Status.
Input '0' to '30' and press '#' key	Terminal will display a green LED light, informing setup is successful.
Insert the desired command code to continue terminal configuration.	Blue LED light will blink faster, informing you´re inside the Main Menu.
Press '*' key or wait for 10 secs without any operation to exit the Main Menu Management Status.	Blue LED will blink slower, informing you´re back in the Normal Operation Status.

Notice: It´s also possible to setup the relay delay time by terminal´s webserver.

Setup the working mode of the terminal

There are 2 types of working mode:

Standalone access controller: The terminal works as an access controller. After validate a user successfully, the terminal will trigger the relay output and send a Wiegand output signal.

Reader mode: The terminal will send out a Wiegand output signal with any reading operation. The reader mode can work with 3rd part access control systems with Wiegand input.

Terminal Working Mode

Enter to terminal main menu	Blue LED light will blink faster, informing you´re inside the Main Menu.
Press Command Code: '5'	Terminal will display a pink LED light, informing you´re in the Terminal Settings Status.
Input '0' and press '#' key to setup terminal work as standlone access controller. OR Input '1' and press '#' key to setup terminal work as reader.	Terminal will display a green LED light, informing setup is successful.
Insert the desired command code to continue terminal configuration.	Blue LED light will blink faster, informing you´re inside the Main Menu.
Press '*' key or wait for 10 secs without any operation to exit the Main Menu Management Status.	Blue LED will blink slower, informing you´re back in the Normal Operation Status.

Notice: Please access the terminal´s webserver to configure the Weigand settings according to your existing controller Wiegand Input.

Door sensor monitor setup

The door sensor monitor will trigger the alarm（Terminal internal buzzer）output of the terminal whenever the door is still opened more than the configured time.

Active / Disable Door Sensor Monitor

Enter to terminal main menu	Blue LED light will blink faster, informing you´re inside the Main Menu.
Press Command Code: '6'	Terminal will display a pink LED light, informing you´re in the Terminal Settings Status.
Input ' 0 ' and press '#' key to disable the door sensor monitor function. OR Input '1' and press '#' key to active the door sensor monitor function.	Terminal will display a green LED light, informing setup is successful.
Insert the desired command code to continue terminal configuration.	Blue LED light will blink faster, informing you´re inside the Main Menu
Press '*' key or wait for 10 secs without any operation to exit the Main Menu Management Status.	Blue LED will blink slower, informing you´re back in the Normal Operation Status.

Notice: It´s also possible to active or disable the door sensor monitor by terminal´s webserver, including the delay setup for its alarm.

Set Default Mode (Factory Setup)

Caution: The factory setup will erase all users, records and set the terminal information back to factory mode.

Factory default Setting

Enter to terminal main menu	Blue LED light will blink faster, informing you´re inside the Main Menu.
Code number not clear. Please confirm it before official version	Terminal will display a pink LED light, informing you´re in the Terminal Settings Status.
Input '000' and press '#' key	Terminal will display a green LED light, informing setup is successful.
Insert the desired command code to continue terminal configuration.	Blue LED light will blink faster, informing you´re inside the Main Menu.
Press '*' key or wait for 10 secs without any operation to exit the Main Menu Management Status.	Blue LED will blink slower, informing you´re back in the Normal Operation Status.

Notice: It´s also possible to Set Default Mode (Factory Setup) by terminal´s webserver.